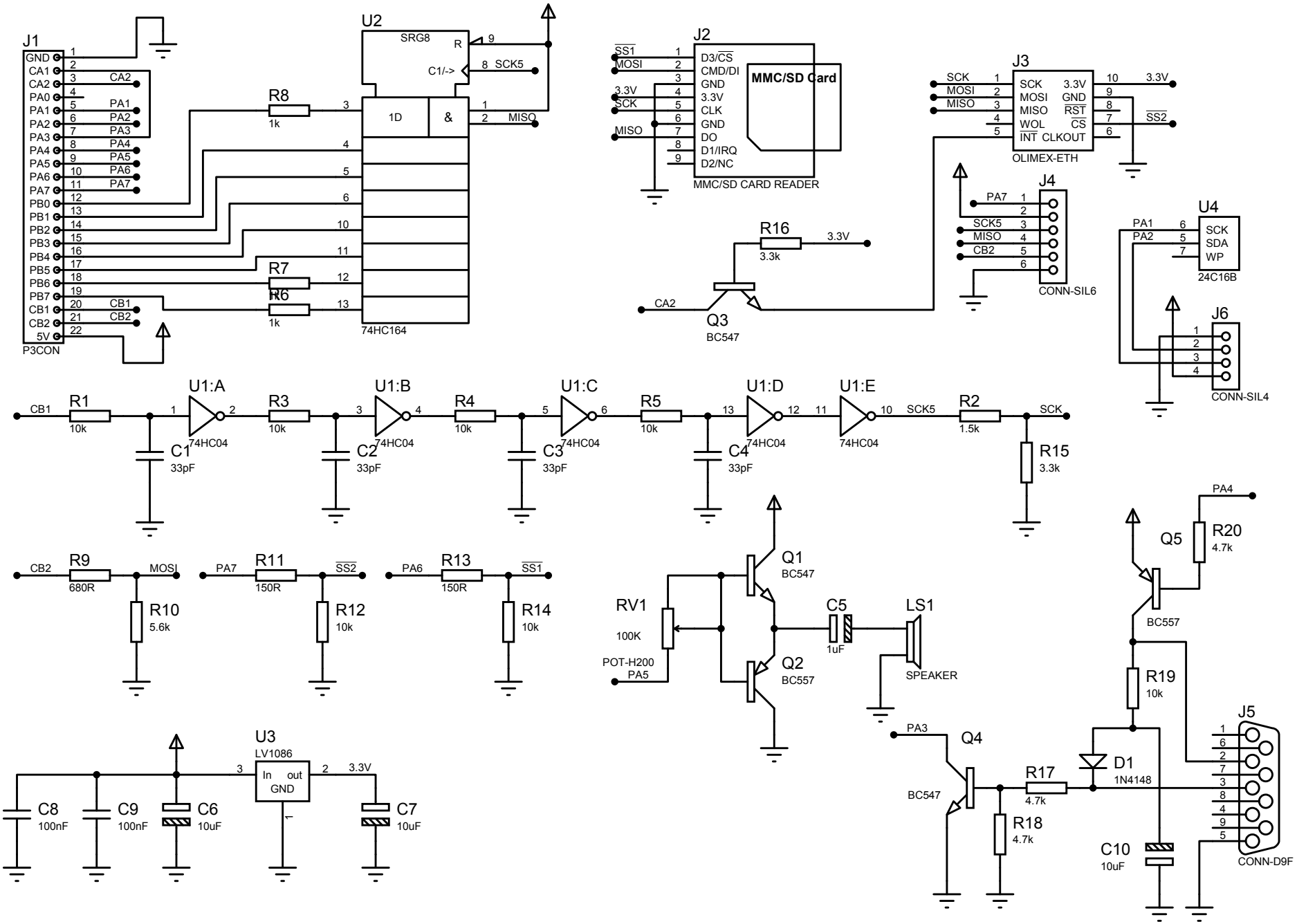
J1
P3CON
GND
CA1
CA2
PA0
PA1
PA2
PA3
PA4
PA5
PA6
PA7
PB0
PB1
PB2
PB3
PB4
PB5
PB6
PB7
CB1
CB2
5V
U2
SRG8
R
C1/->
SCK5
MISO
1D
&
74HC164
R8
1k
R7
R6
1k
J2
MMC/SD Card
D3/CS
CMD/DI
GND
3.3V
CLK
GND
DO
D1/IRQ
D2/NC
SS1
MOSI
SCK
MISO
MMC/SD CARD READER
J3
SCK
MOSI
MISO
WOL
INT
3.3V
GND
RST
CS
CLKOUT
SS2
OLIMEX-ETH
J4
PA7
SCK5
MISO
CB2
CONN-SIL6
R16
3.3k
3.3V
CA2
Q3
BC547
U4
SCK
SDA
WP
24C16B
J6
CONN-SIL4
CB1
R1
10k
U1:A
74HC04
C1
33pF
R3
10k
U1:B
C2
33pF
R4
10k
U1:C
C3
33pF
R5
10k
U1:D
C4
33pF
U1:E
SCK5
R2
1.5k
SCK
R15
3.3k
CB2
R9
680R
MOSI
R10
5.6k
PA7
R11
150R
SS2
R12
10k
PA6
R13
150R
SS1
R14
10k
RV1
100K
POT-H200
PA5
Q1
BC547
Q2
BC557
C5
1uF
LS1
SPEAKER
PA4
Q5
R20
4.7k
BC557
R19
10k
PA3
Q4
BC547
R17
4.7k
R18
4.7k
D1
1N4148
C10
10uF
J5
CONN-D9F
U3
LV1086
In
out
GND
3.3V
C8
100nF
C9
100nF
C6
10uF
C7
10uF