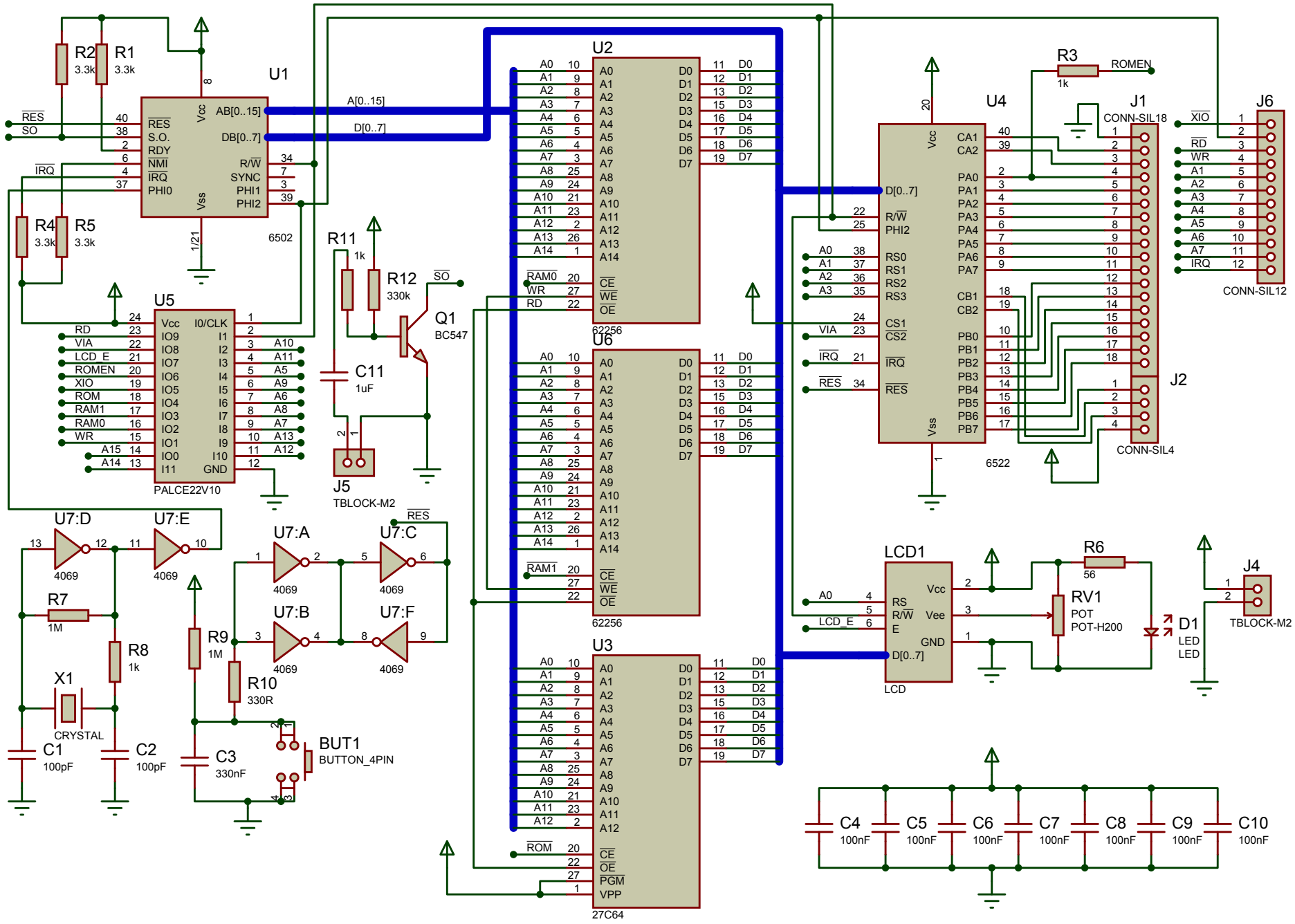
U1
6502
AB[0..15]
DB[0..7]
A[0..15]
D[0..7]
RES
SO
IRQ
R1 3.3k
R2 3.3k
R4 3.3k
R5 3.3k
U2
62256
U6
62256
U3
27C64
U4
6522
U5
PALCE22V10
R11 1k
R12 330k
Q1 BC547
C11 1uF
J5 TBLOCK-M2
R3 1k
ROMEN
J1 CONN-SIL18
J2 CONN-SIL4
J6 CONN-SIL12
XIO
RD
WR
A1
A2
A3
A4
A5
A6
A7
IRQ
LCD1 LCD
R6 56
RV1 POT POT-H200
D1 LED LED
J4 TBLOCK-M2
U7:D 4069
U7:E 4069
U7:A 4069
U7:B 4069
U7:C 4069
U7:F 4069
R7 1M
R8 1k
R9 1M
R10 330R
X1 CRYSTAL
C1 100pF
C2 100pF
C3 330nF
BUT1 BUTTON_4PIN
C4 100nF
C5 100nF
C6 100nF
C7 100nF
C8 100nF
C9 100nF
C10 100nF