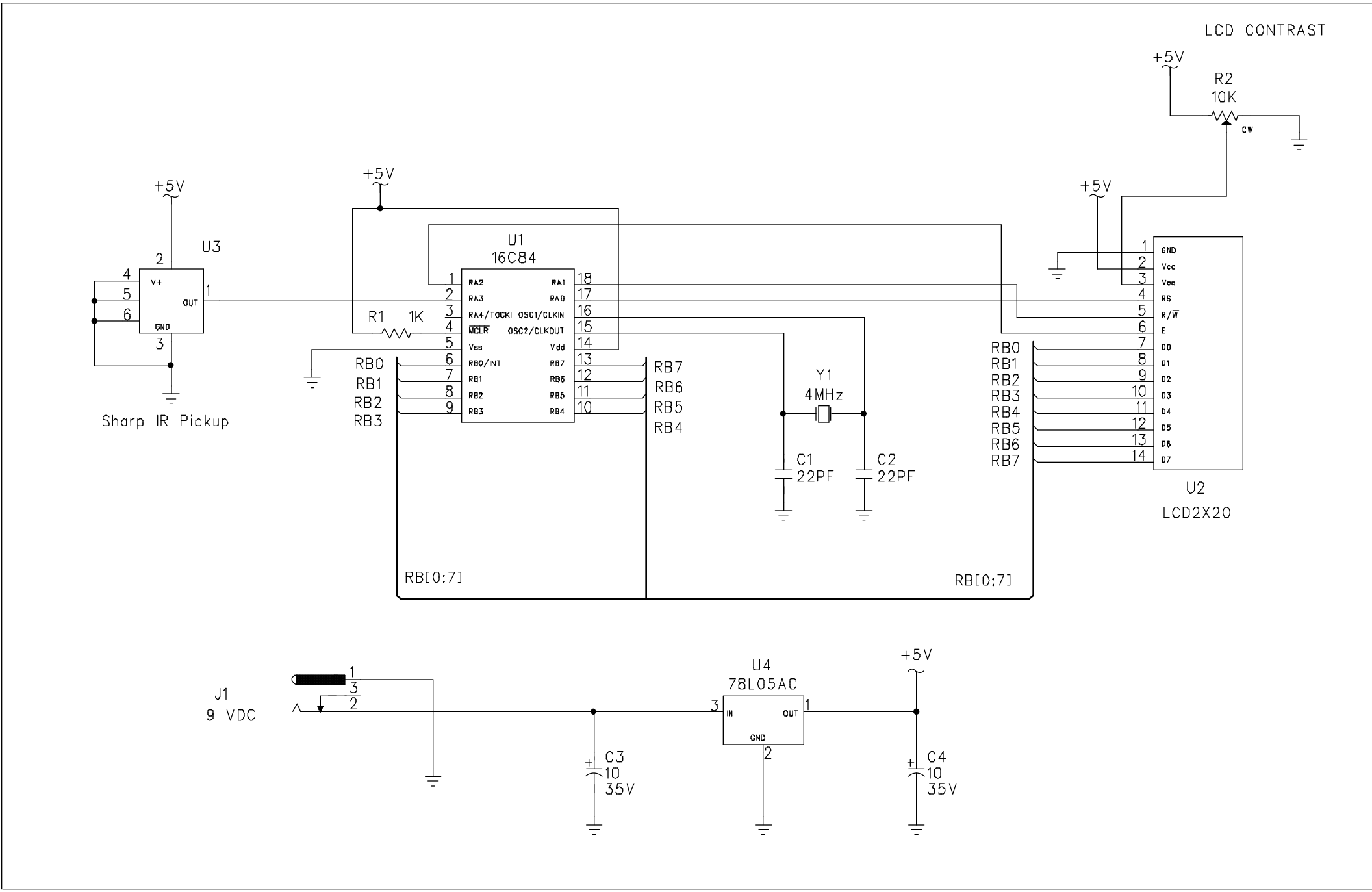
LCD CONTRAST
+5V
R2
10K
CW
+5V
U3
V+
OUT
GND
Sharp IR Pickup
+5V
U1
16C84
RA2
RA3
RA4/TOCKI
MCLR
Vss
RB0/INT
RB1
RB2
RB3
RA1
RA0
OSC1/CLKIN
OSC2/CLKOUT
Vdd
RB7
RB6
RB5
RB4
R1 1K
RB0
RB1
RB2
RB3
RB7
RB6
RB5
RB4
Y1
4MHz
C1
22PF
C2
22PF
RB[0:7]
+5V
GND
Vcc
Vee
RS
R/W
E
D0
D1
D2
D3
D4
D5
D6
D7
RB0
RB1
RB2
RB3
RB4
RB5
RB6
RB7
U2
LCD2X20
RB[0:7]
J1
9 VDC
U4
78L05AC
IN
OUT
GND
+5V
C3
10
35V
C4
10
35V